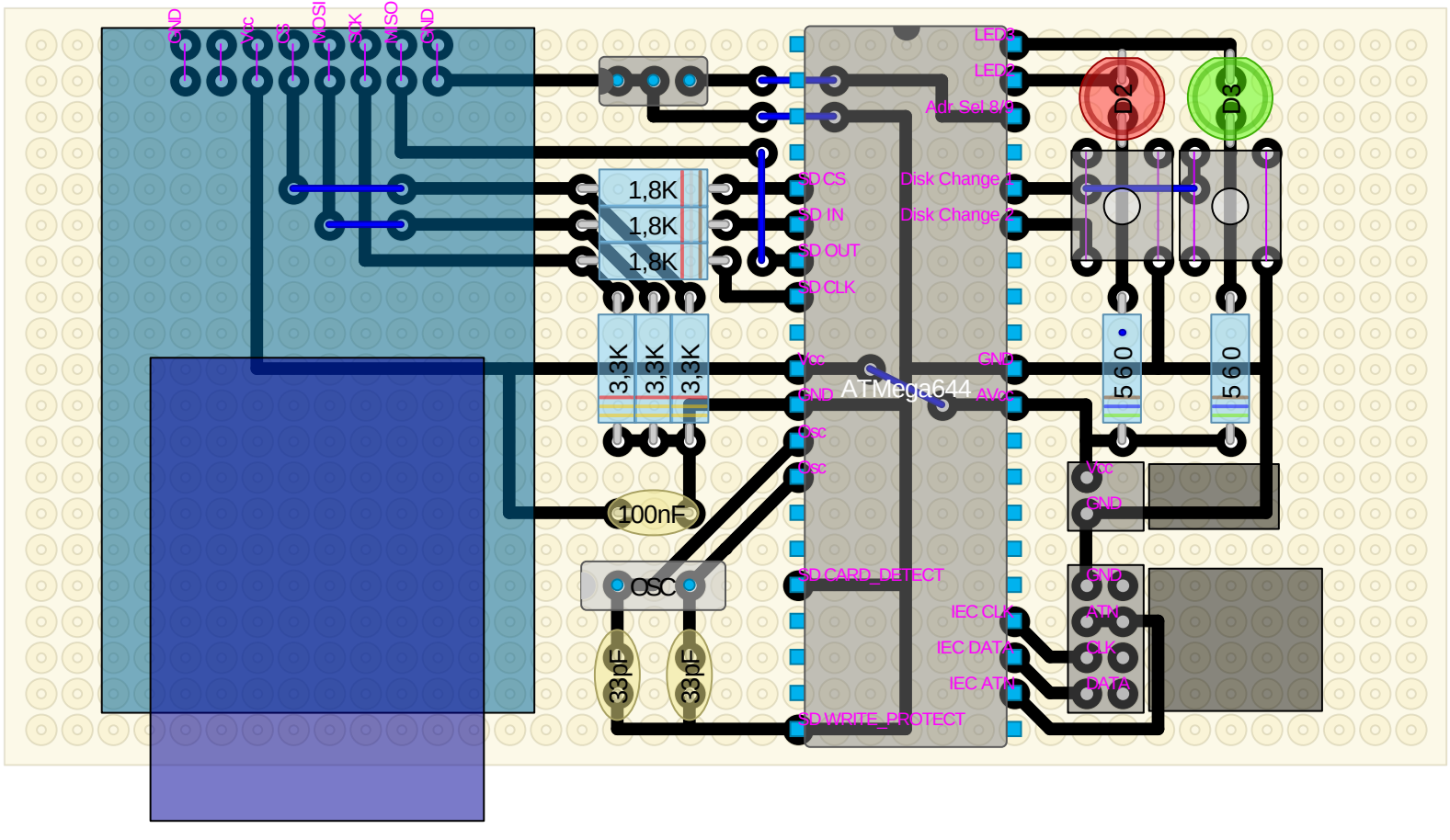
GND
Vcc
CS
MOSI
SCK
MISO
GND
1,8K
1,8K
1,8K
3,3K
3,3K
3,3K
100nF
OSC
33pF
33pF
SD CS
SD IN
SD OUT
SD CLK
Vcc
GND
Osc
Osc
SD CARD_DETECT
SD WRITE_PROTECT
ATMega644
LED3
LED2
Adr Sel 8/9
Disk Change 1
Disk Change 2
GND
AVcc
IEC CLK
IEC DATA
IEC ATN
D2
D3
560
560
Vcc
GND
GND
ATN
CLK
DATA